Elektrotechnische Fabrik
GmbH & Co. KG

Pole mount socket HSW 4043

Technical data

Socket	CEE-Steckdose IP44
Rated voltage	250 V
Rated current	16 A
Degree of protection	IP44
Measurements (L x W x H)	168 x 106 x 129 mm

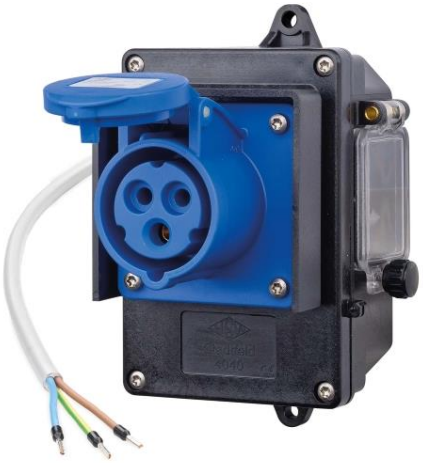

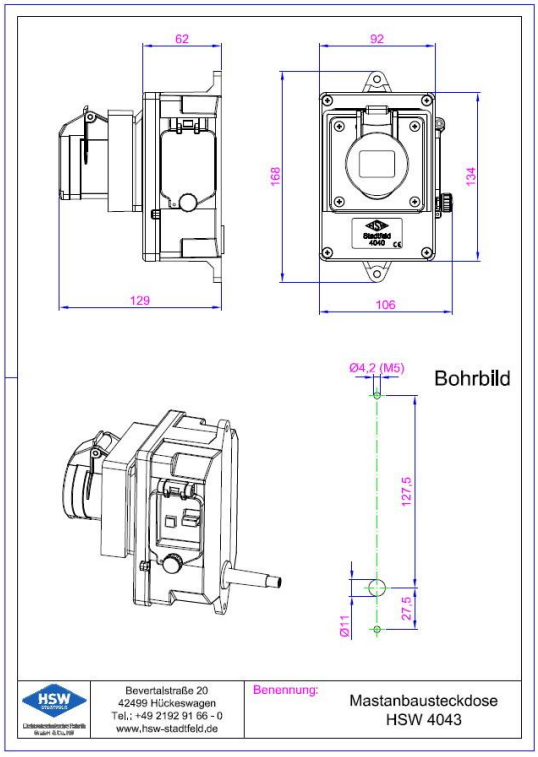

Delivery content

2 drilling screws 4,8 x 22 mm

Connection cable

Equipment variants

Residual current circuit breaker (RCCB)

Residual current circuit breaker with overcurrent protection (RCBO)

Connection cable H05VV-F 3 x 1,0 mm² in 4.500 mm, 6.000 mm or 8.000 mm lengths

(other lengths on request)

Print errors and technical changes excepted (Status: January 2024)